⑬
SOUND CIRCUIT DEFECTS

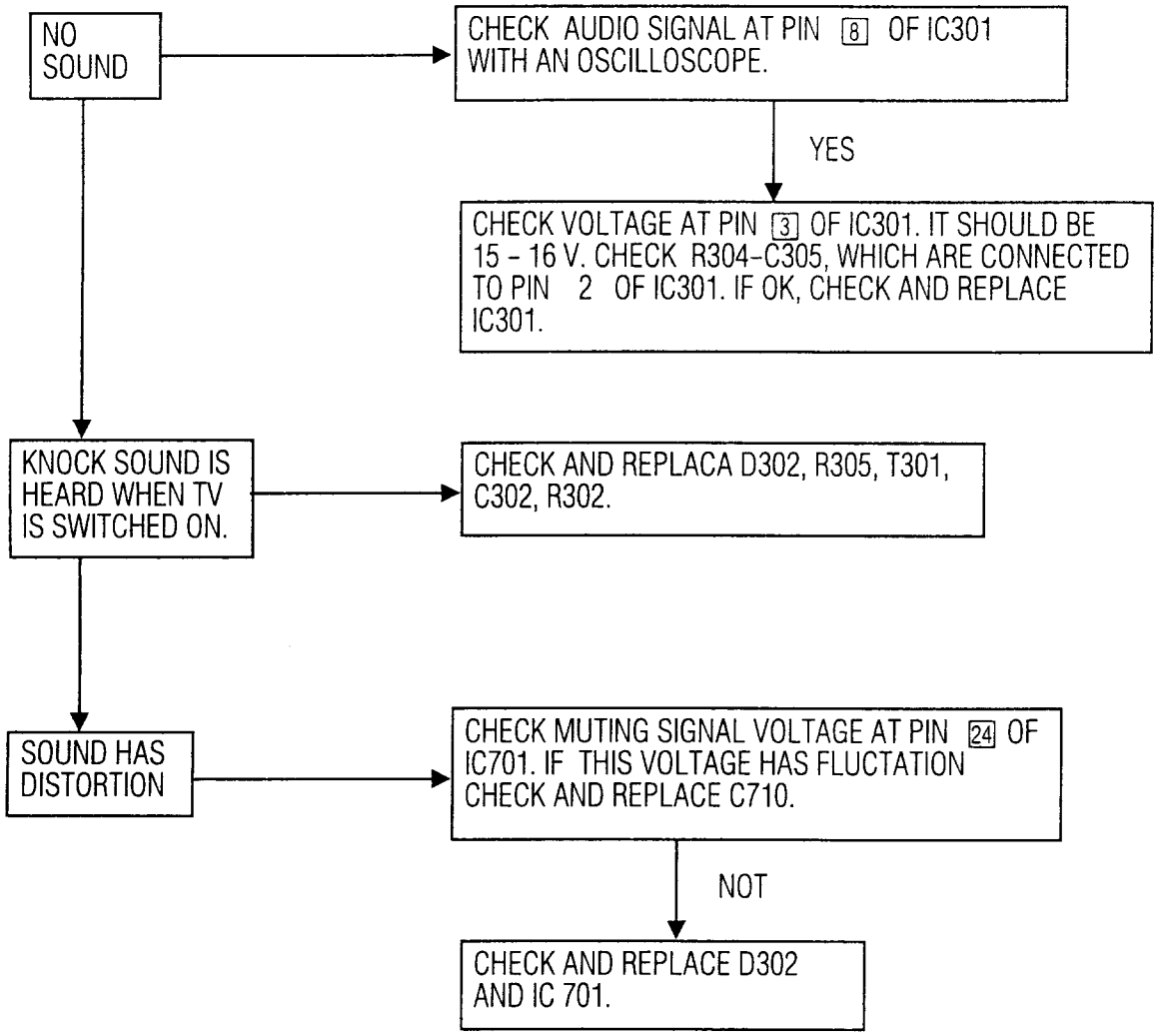

SPARE PARTS

PART NUMBER	DISCRIPTION	POSITION
010770	POWER SWITCH ME5-S2	—
031228	PERI SOCKET	ST502
031960	CRT SOCKET (B10227 TYPE)	—
038905	POWER CORD L=2400	—
051581	DST AT2 90	TR802
051583	LINE FILTER 27UH	L101
051584	COIL H-AMPL	L801
051585	COIL H—LIN	L802
051587	DRIVER TRANSFORMER	TR801
051609	SMPS AT2 90 II	TR101
051610	COIL CHOKE VERTICAL 500UH	L804
052495	COIL ANTENNA SW	L201
053498	COIL 1.2UH	L803
053499	COIL 7UH	—
053500	COIL 10UH K	L106 L410
053501	COIL 330UH	L502
053502	COIL 22UH	L501
053505	FILTER SFE5.5MC	F204
053506	COIL DEMOD	F203
053508	COIL TPC 5.5MC	F202
053511	DELAY LINE 5DL145	DL401
053512	COIL 8128-A3753	FI205 FI406 FI407 FI408 FI409
053513	COIL CHROMA 4.4MHH	FI404
053523	COIL A4449	FI401
053525	COIL 2K843EG	FI403
053529	COIL 100UH	DR402
053547	COIL 3UH	L301 L302
053600	COIL DISKR. 6.5MHZ	F202
053601	COIL DISKR. 5.5 MHZ	F205
053633	COIL 10UH (RAD)	DR401 L202
054230	FUSE 3.15AT	FU101
054275	FUSE 1.25A (DELAY)	FU102
056065	SAW FILTER OFW K2950	F201
056066	CER.FILTER TPS 6.5MB	FI207
056067	CER.FILTER SFE6.5MC	FI208
056736	CRT SS 5109B22TC-DSE-1992JL	—
056946	CHRYSTAL 12MHZ	Q901
056947	CHRYSTAL 500KHZ	Q701
056955	CRYSTAL 8.8MHZ	Q401
100224	CFR 22R J 1/4W	R713
100473	CFR 47R J 1/4W	R106 R113
100684	CFR 68R J 1/4W	R403
100751	CFR 75R J 1/4W	R516
101106	CFR 100R J 1/4W	RI901 R114 R945 R947 R924
101154	CFR 150R J 1/4W	R944
101223	CFR 220R J 1/4W	R109 R731
101274	CFR 270R J 1/4W	R801 R802
101395	CFR 390R J 1/4W	R1203
101470	CFR 470R J 1/4W	R733
101562	CFR 560R J 1/4W	R934 R935 R936
101683	CFR 680R J 1/4W	R207
101820	CFR 820R J 1/4W	R1202
102101	CFR 1K J 1/4W	R104 R705 R740 R448 R210 R923
102126	CFR 1.2K J 1/4W	R1236 R1237 R444
102157	CFR 1.5K J 1/4W	R1207 R1209 R1211 R408 R422
102189	CFR 1.8K J 1/4W	R1201
102198	CFR 1.3K J 1/4W	R120
102227	CFR 2.2K J 1/4W	R942 R943 R424
102338	CFR 3.3K J 1/4W	R1225 R216 R217
102479	CFR 4.7K J 1/4W	R117 R732 R902 R904 R906 R908 R910 R919 R915 R946 R215

PART NUMBER	DISCRIPTION	POSITION
102563	CFR 5.6K J 1/4W	R940
102685	CFR 6.8K J 1/4W	R110 R112
102825	CFR 8.2K J 1/4W	R909
103116	CFR 10K J 1/4W	R901 R903 R905 R907 R911 R937 R939 R439
103155	CFR 15K J 1/4W	R926 R927 R928 R929 R930 R931 R932 R933 R419 R421
103224	CFR 22K J 1/4W	R306 R509 R703
103273	CFR 27K J 1/4W	R938
103475	CFR 47K J 1/4W	R1222 R1229 R922
103561	CFR 56K J 1/4W	R510 R511 R512 R941
104110	CFR 100K J 1/4W	R920 R921
104151	CFR 150K J 1/4W	R925
104185	CFR 180K J 1/4W	R1219
104222	CFR 220K J 1/4W	R1221
104273	CFR 270K J 1/4W	R1220
104332	CFR 330K J 1/4W	R1234
104470	CFR 470K J 1/4W	R807
105106	CFR 1M J 1/4W	R722
106100	CFR 10M J 1/4W	R916 R917
109106	CFR 1R J 1/4W	R304
109224	CFR 2.2R J 1/4W	R701
109473	CFR 4.7R J 1/4W	—
1113222	CFR 22K J 1/4W	R1213 R1214 R1215
113270	RMO 27K J 2W	R115 R61
113330	RMO 33K J 2W	R105
113477	RMO 47K J 2W	R118 R1208 R1210 R1212
114330	RMO 330K J 1.5W	R112
114820	RMO 820K J 1.5W	R111
115473	RM 4.7M %1. 1W	R102 R103
119475	RMO 4.7R J 1.5W	R715
121153	RW 150R J 2W	R803
122112	RW 1K J 1.5W	—
129109	RW .1R J .75W	R121 R122 R123 R808 R1225
129273	RW 2.7R J 4W	—
129486	RW 4.7R J 11W	R805
131224	R—VAR 220R	P401
131250	R-VAR 250R	P703
132129	R-POT 1K	P1201 P1202 P1203
132252	R-VAR 2.5K (V)	P101
132253	R-VAR 2.5K (H)	P702
132475	R-VAR 4.7K	P501
133147	R-VAR 10K	P201
133253	R-VAR 25K	P701
134234	R-POT 220K	P1204 P1205
154213	PTC DEGAUSSING COIL 98009	R124
154216	4.7R S234	R101
200222	CC 22PF J 100V	C434 C437
200331	CC 33PF J 63V	C906 C907 C920 C1210
200472	CC 47PF J 63V	C913 C915
200473	CC 47PF J 63V	C501 C1203 C1203
200564	CC 56PF J 63V	C1209
200682	CC 68PF	C427 C441
201102	CC 100PF J 63V	C914
201104	CC 100PF J 63V	C117 C924 C210
201105	CC 100PF K 63V	C428 C431
201124	CC 120PF K 63V	C408 C435 C442 C446
201151	CC 150PF J 63V	C802
201152	CC 150PF	C412
201181	CC 180PF K 63V	C714 C430 C439
201222	CC 220PF	C404

PART NUMBER	DISCRIPTION	POSITION
201223	CC 220PF 2KV	C121 C809
201331	CC 330PF K 63V	C433
201332	CC 330PF J 63V	C1212 C1213 C1214
201391	CC 390 PF	C 407
201471	CC 470PF 2KV	C807
201472	CC 470PF K 63V	C438 C440
201560	CC 560PF K 63V	C306
202105	CC 1NF 1KV	C135 C136 C137 C138
202106	CC 1NF 100V	CR701 C713 CT102 CT103 C720 C721 C722
204106	CC 100NF 63V	C724
209680	CC 6.8PF J 63V	C921
213684	C-PEM 68NF 250V	C133
240470	TAN.CAP. 4.7UF M 10V	C918 C919
250105	EC 1UF 100V	C112 C502 C417 C424 C425 C214 C216 C217
251115	EC 10UF 25V	C503 C717 C905 C910 C912 C201 C218
251116	EC 10UF	C401
251225	EC 22UF16V	C516
251478	EC 47UF 16V	C134 C1215 C419
251479	EC 47UF 25V	C110
251480	EC 47UF 250V	C122 C123 C810
252112	EC 100UF 16V	C444
252113	EC 100UF 25V	C304
252152	EC 150UF 385V	C103
252225	EC 220UF 25V	C801
252476	EC 470UF 25V	C301 C701
252477	EC 470UF 40V	C125 C126
253108	EC 1000UF 25V	C131
259223	EC 2.2UF 63V	C127 C130
259477	EC 4.7UF 40V	C505 C712 C1207 C207
259478	EC 4.7UF 250V	C1217
260140	C-TRIM 332PF	C420
271220	C-MFP 220PF 1600V	C116
271683	C-STRY 680PF %2 160V	–
272101	C-PEM INF 63V	C445
272151	C-PEM 1.5NF K 63V	C713
272221	C-PEM 2.2NF K 63V	C309 C310 C410 C411 C413
272330	C-PEM 3.3NF K 63V	C307 C703
272471	C-PEM 4.7NF K 63V	C111 C113 C91 C211
272472	C-PEM 4.7NF K 400V	C719
272681	C-PEM 6.8NF K 63V	C1216 C414 C422
273102	C-PEM 10NF K 63V	C504 C506 C507 C508 C509 C510 C511 C512 C925
273103	C-PPM 10NF K 250V	C808
273104	C-PPM 10NF J 1500V	C813
273108	C-POL 10NF K 400V	C517 C518 C519
273110	C-MKP 10NF-K 1000V	C1219
273150	C-PEM 15NF K 63V	C711
273222	C-PEM 22NF K 250V	C909
273224	C-PEM 22NF K 63V	C710 C415 C421 C203 C212 C213
273331	C-PPM 33NF J 1000V	C115
273471	C-PEM 47NF K 63V	C803 C423 C432
273474	C-PEM 47NF K 250V	C1218
273681	C-PEM 68NF K 63V	C715
274104	C-PEM 100NF K 63V	C305 C901 C1211 C443 C202 C205 C206 C209 C215 C219
274106	C-PEM 100NF K 250V	C1202
274222	C-PEM 220NF K 63V	C909
274224	C-PEM 220NF 250V	C710
274330	C-PEM 330NF J 250V	C804
274332	C-PEM 330NF K 63V	C418 C429
274470	C-PEM .47UF J 200V (MPP)	C805
274471	C-PEM 470NF K 63V	C705 C208
274680	C-PEM 680NF 250V	C101
275100	C-PPM 1UF J 250V	C707
300305	DIODE BA157	D704
302289	DIODE 1N4148	D101 D102 D104 D501 D503 D901 D902 D201
302626	DIODE SFH205 IR	D904
302638	DIODE BY299	D109 D801
302939	DIODE 1N4002	D301 D701
302947	DIODE 1N4004	D1214
302984	DIODE BYW72	D110 D111 D112
303085	DIODE BZX55-C30	D61
303086	DIODE Z. BZX85-C6V2	D105
303087	DIODE C2540 BRIDGE	GR101
303093	DIODE BA159	D103
303104	DIODE BZX83 C4V7	D1208
303900	LED ROT	D903
400338	TRN BF422	T1203 T1205 T1207 T1211
400339	TRN BF423	T1208 T1209 T1210
400987	TRN BC548	T301 T901 T902 T903 T905 T906 T907 T401 T404 T405
400989	TRN BC558	T1201 T201 T203 T904
400990	TRN BF869G	T1202 T1204 T1206
400991	TRN BUZ90A	T101
400993	TRN BC635	T801
401003	TRN S2055F	T802
410015	THRY SCRESM740	T701
451463	IC TDA4605	IC 101
451464	IC TDA5931-4	IC 201
451465	IC SDA 2526	IC902
451467	IC TBA121	IC202
451468	IC TDA1037	IC301
451469	IC TDA4060	IC903
451508	IC TDA4580	IC501
451509	IC UPD6142	IC904
451510	IC TEA2029	IC701
451512	IC TDA4565	IC402
451516	IC TDA4555	IC401
451517	IC TDB7805CT (T0220CASE)	T103
451518	IC LM317T (T0220CASE)	T102
451765	IC SDA20160	IC901
500265	WASHER PLST 6*3*2.5	–
50S158	PAL/SECAM PLATE ASSY	–
50S164	CRT PLATE ASSY	–
50S221	BRACKET LED	–
50S305	HEAT SINK HORIZONTAL	–
50S306	HEAT SINK REGULATOR AT2	–
50S307	HEAT SINK SOUND AT2	–
50S308	HEAT SINK POWER AT2	–
520304	SPRING CRT EARTH LEAD	–
52N820	CIRCUIT DIAGRAM 90 PS/BG	–
52P110	CHASSIS 20" PS B/G-D/K	–
52P140	IF B/G-D/K ASSY	–
530307	CRT EARTHING HOOK	–
571925	PUSH CATCH NEW TYPE	–
597166	DEGAUSSING COIL 20"	–
597317	HEAT SINK 2-IC200	–
60U172	CONTROL UNIT ASSY	–
60U203	LENS LED	–
60U805	STROPOR TOP 20SI-BK00	–
60U806	STROPOR BOTTOM 20SI-BK00	–
60U902	RUBBER CONTACT-II 6KEY 20SI-BK00	–
60U903	RUBBER CONTACT-II 7KEY 20SI-BK00	–
70P258	KNOB POWER PAINTED	–
71S320	NAME PLATE BEK02 D.C 49.9*11.2*0.5	–
72W205	BAÇK COVER	–
72W251	FRONT COVER	–
72X136	TUNER TFK 2201 PKC-3x8630	–
72X261	CU DOOR PAINTED	–
72X800	GIFT BOX	–
850107	SPEAKER FOSTER	–
880187	R/C HANDSET ASSY BEK0-2 TX	–

BEKO

ALTERNATIVE PAL DECODER

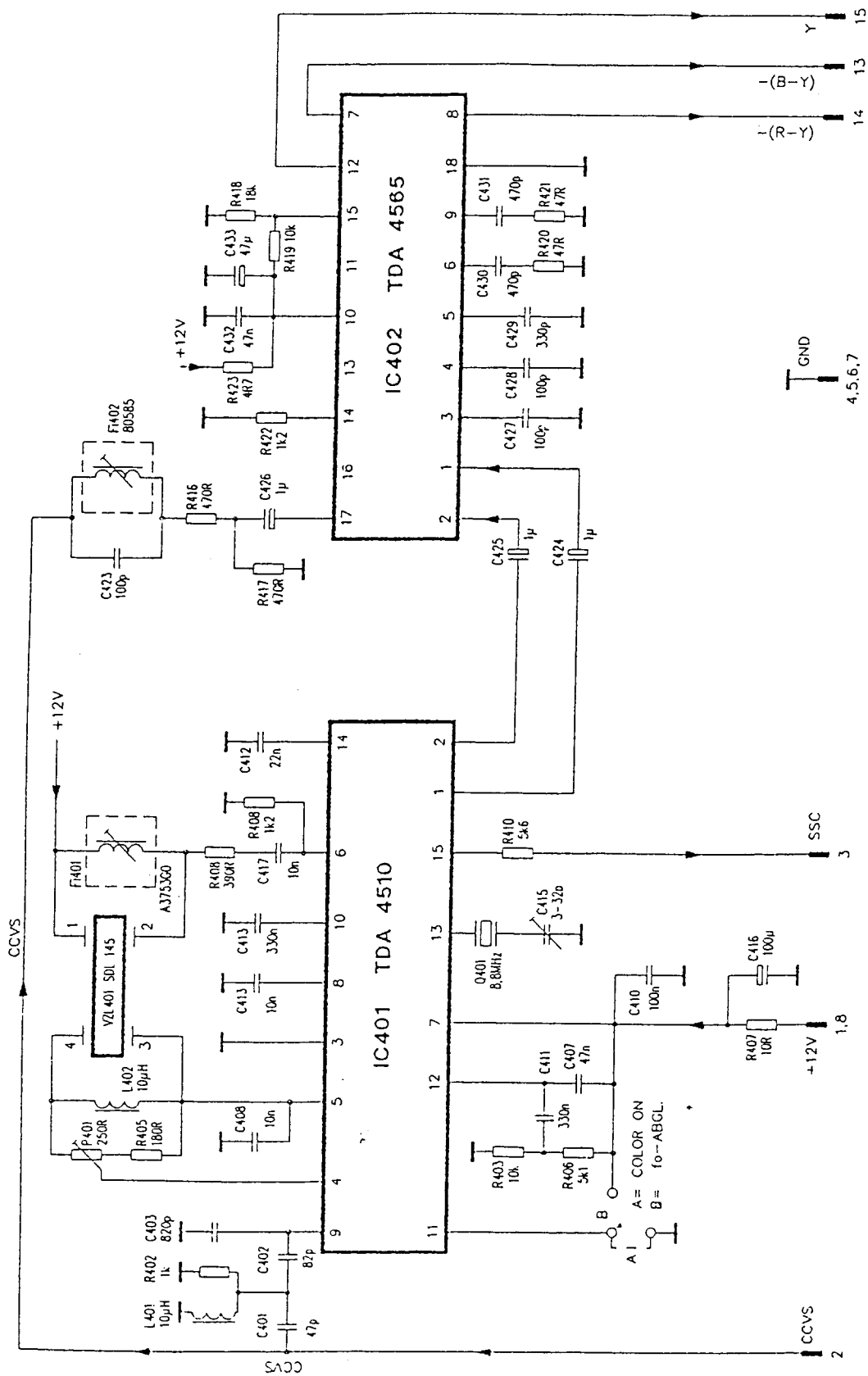

BEKO

IF (NICAM)

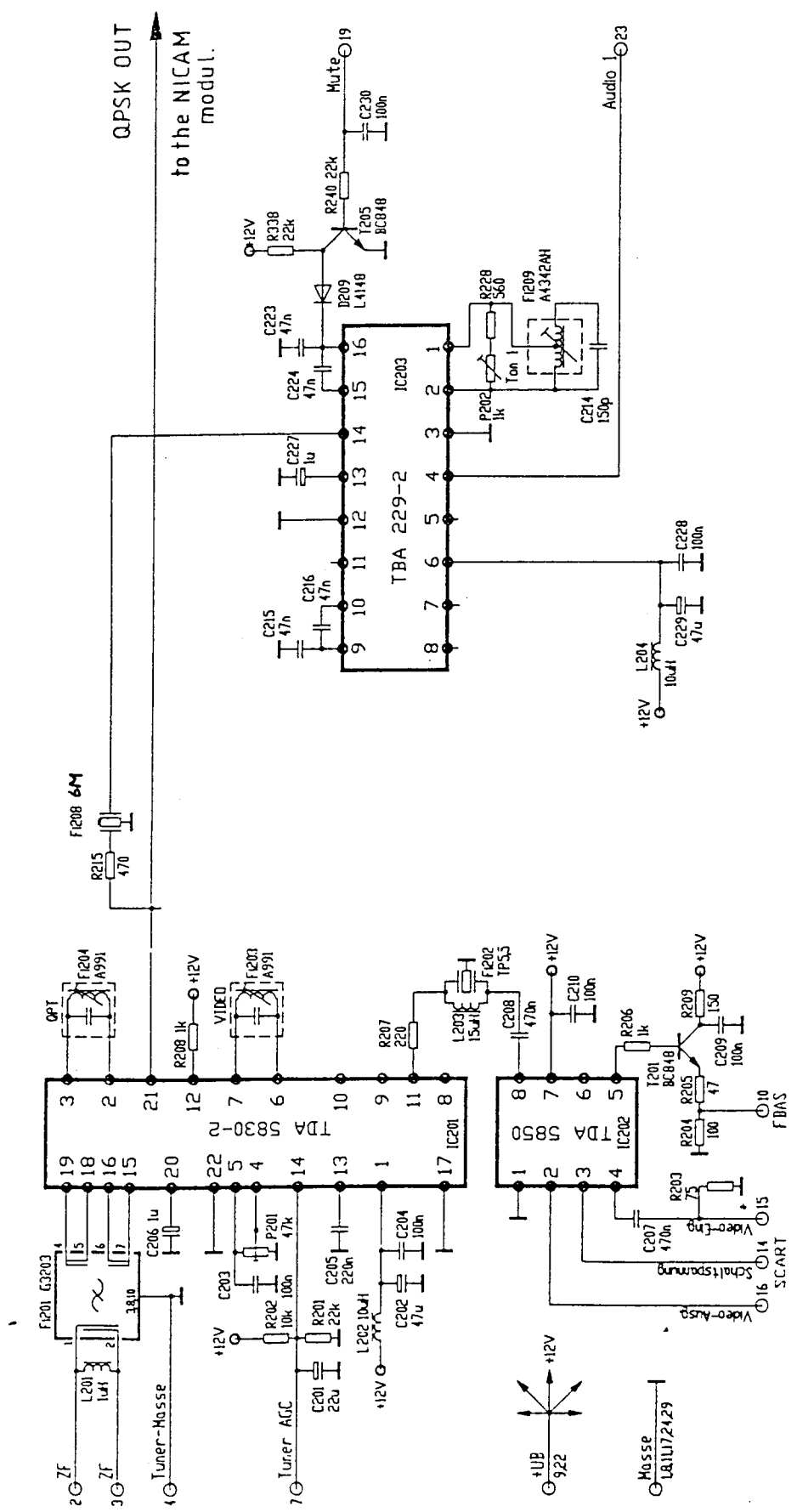

BEKO

NICAM DROP OUT ALIGNMENT PROCEDURE

Nicam drop out can occur on TV switch on or may occur when the CTV has thoroughly warmed up.

In either instances the procedure for correcting the problem is as follows:-

1. Equipment required : Digital volt meter and non metallic trimmer

2. Remove back cover, connect up receiver to power supply and a good Nicam aerial signal.

3. Switch the receiver on to obtain picture and sound

   The following alignment procedure should be carried out within 5 minutes of switch on, on a good quality Nicam transmission.

Alignment procedure for drop out after TV warm up

A. Connect the volt meter to Pin 1 of IC603 (TDA 8732).

B. C678 (variable capacitor and located on the Nicam PCB) should be carefully adjusted until the voltage on Pin 1 IC603 measures 2.8/2.9V (DC).

   NOTE: C678 rotates through 360° and so a careful and slow adjustment is required.

Alignment procedure for drop out on switch on

If Nicam drop out happens on switch on the voltage reading on Pin 1 of IC603 will be inaccurate and cannot be used for the setting up procedure.

In this instance C678 must be adjusted slowly and until the Nicam OSD flashing stops.

When the Nicam OSD flashing has ceased proceed as directed above, sections 'A' and 'B'.

Other

1. The voltage varies on Pin 1 of IC603 as the receiver "warms up" and normally the voltage drops. Therefore if the voltage is measured again after about 30 minutes it will have fallen below the set level (2.8/2.9V). The capacitor **must not** be readjusted. The fact the voltage has varied is a normal part of receiver operation process.

2. If the problem recurs after the TV has warmed up, or if the setting up voltage can not be achieved, replace crystal Q4 and re-set C678.

Our ref: JK/JV/3829

BEKO

ALTERNATIVE AUDIO CIRCUITRY FOR 90° 14"-21" CTV'S

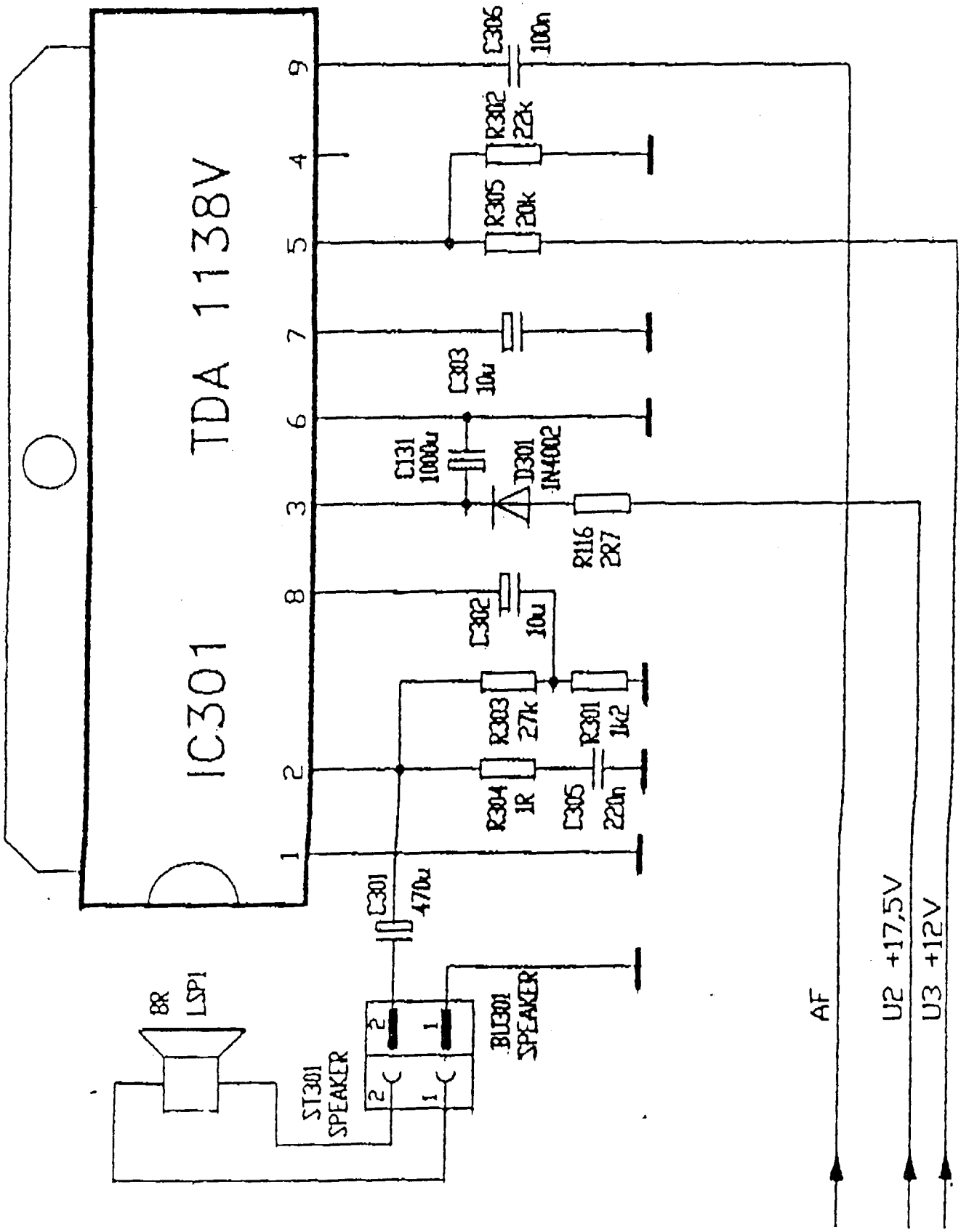

BEKO

AF POWER AMPLIFIER FOR TV MODEL 11225T/15225T/16228T

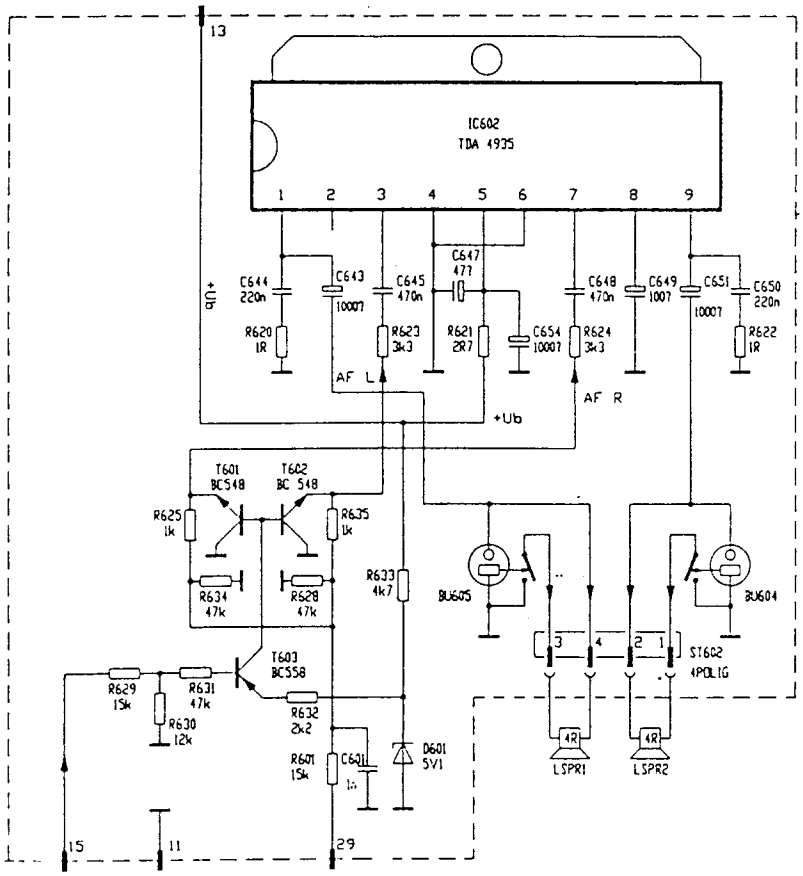

PAL DECODER

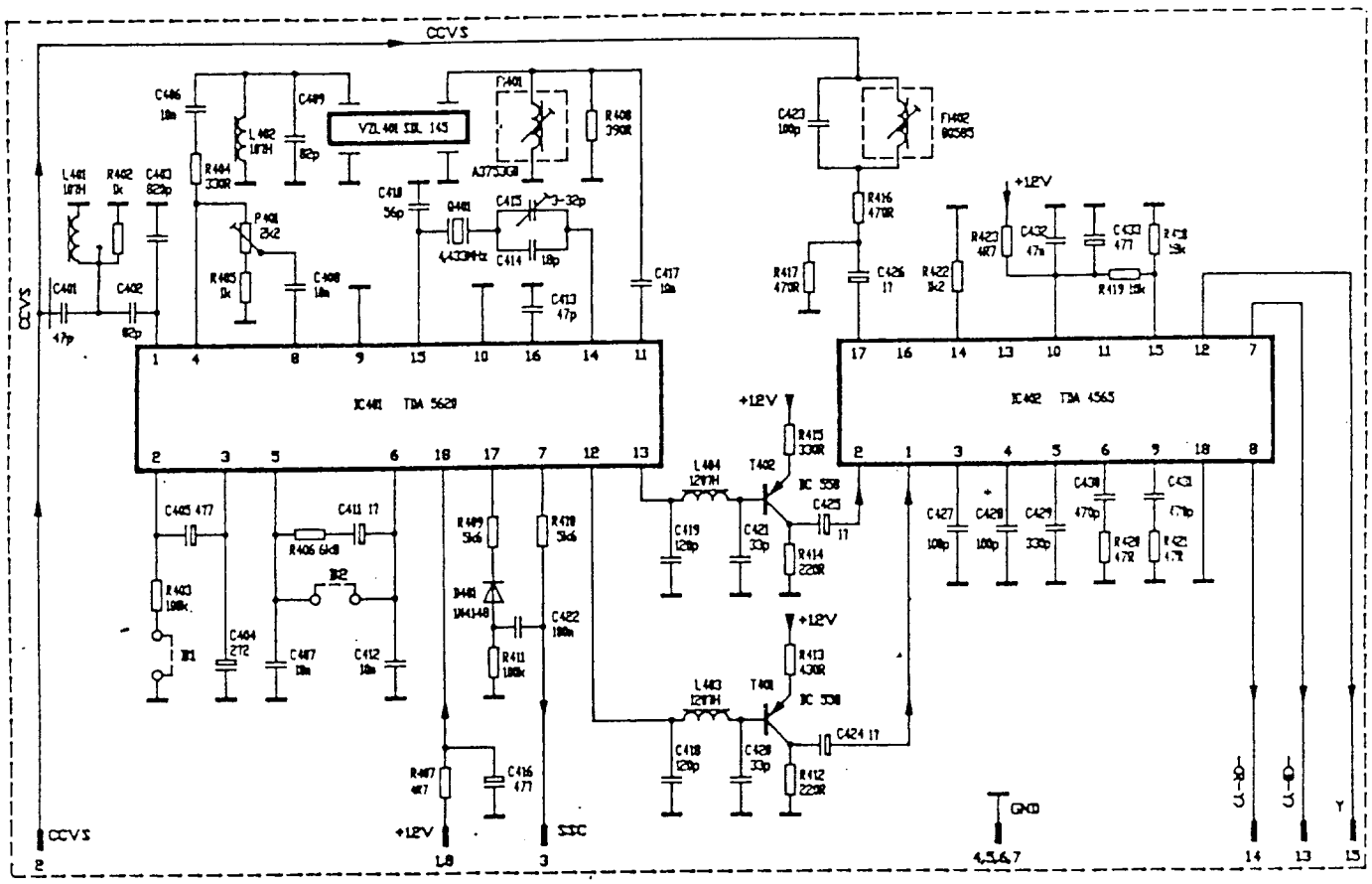

MA

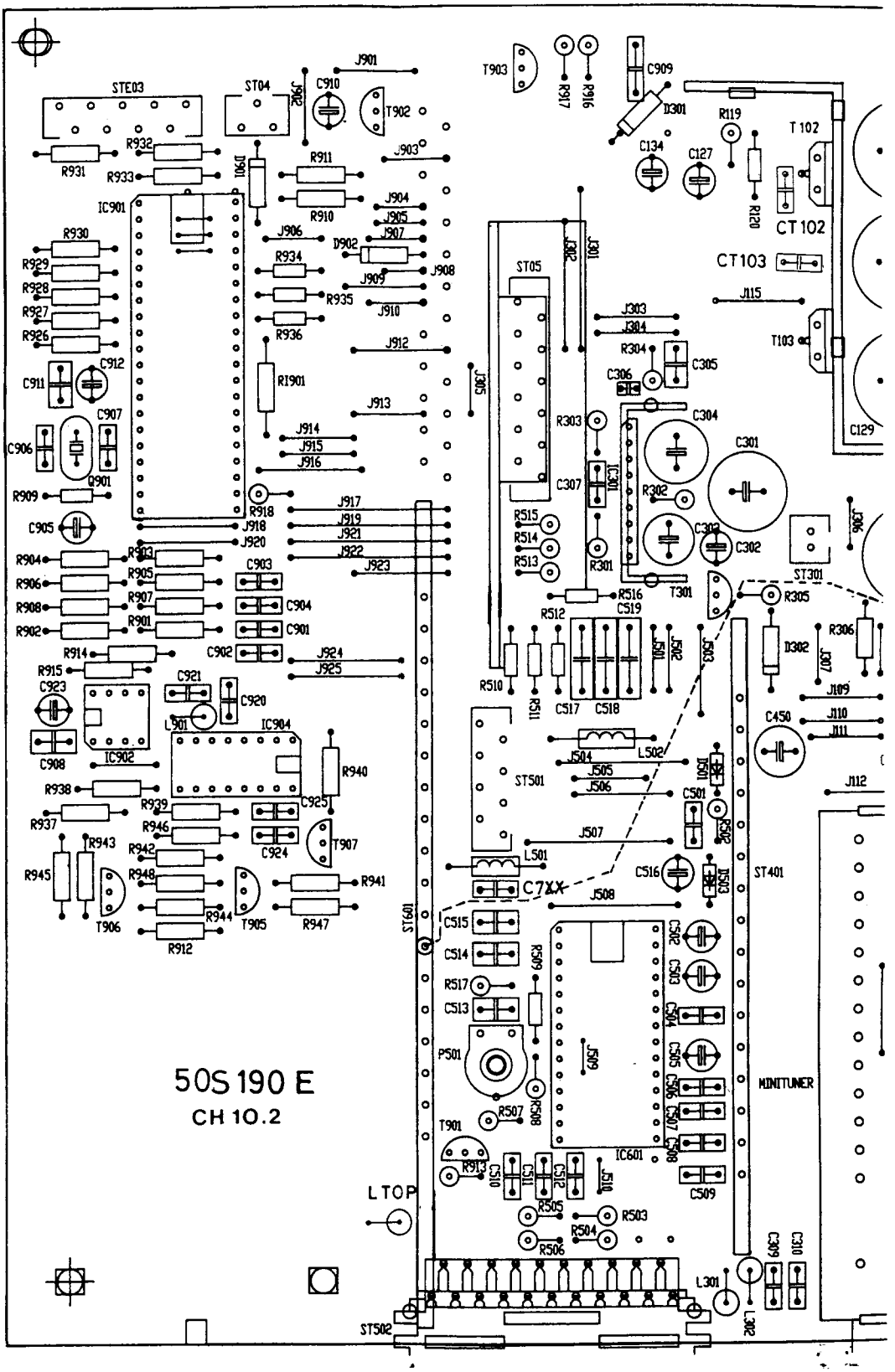
50S 190 E
CH 10.2
LTOP
MINITUNER
CT102
CT103
C7XX
STE03
ST04
ST05
ST301
ST401
ST501
ST601
ST502
IC901
IC902
IC904
IC601
T102
T103
T901
T902
T903
T905
T906
T907
T301
Q901
P501
L301
L302
L501
L502
C129
C450

MAIN CHASSIS 90°

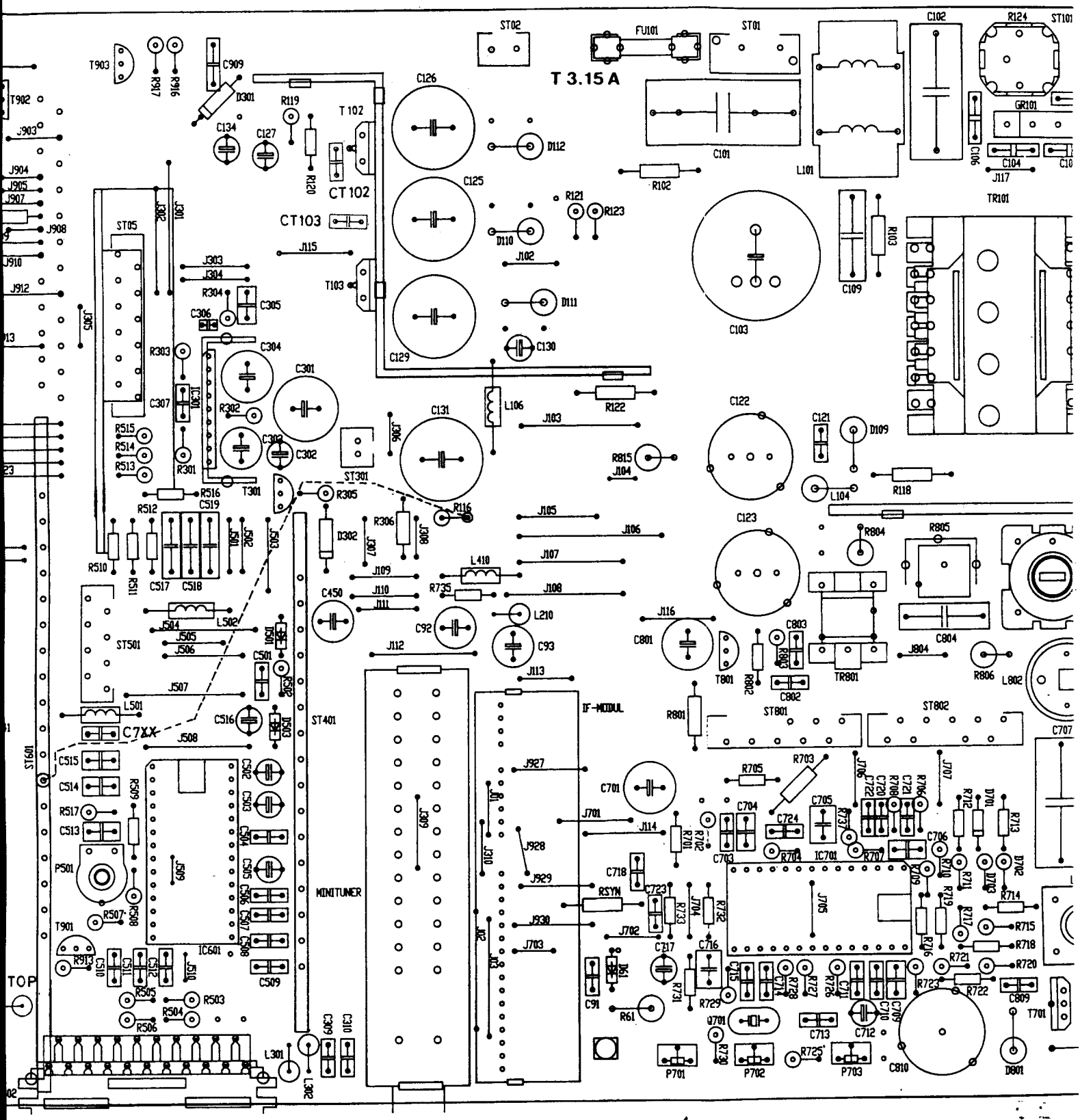

90°

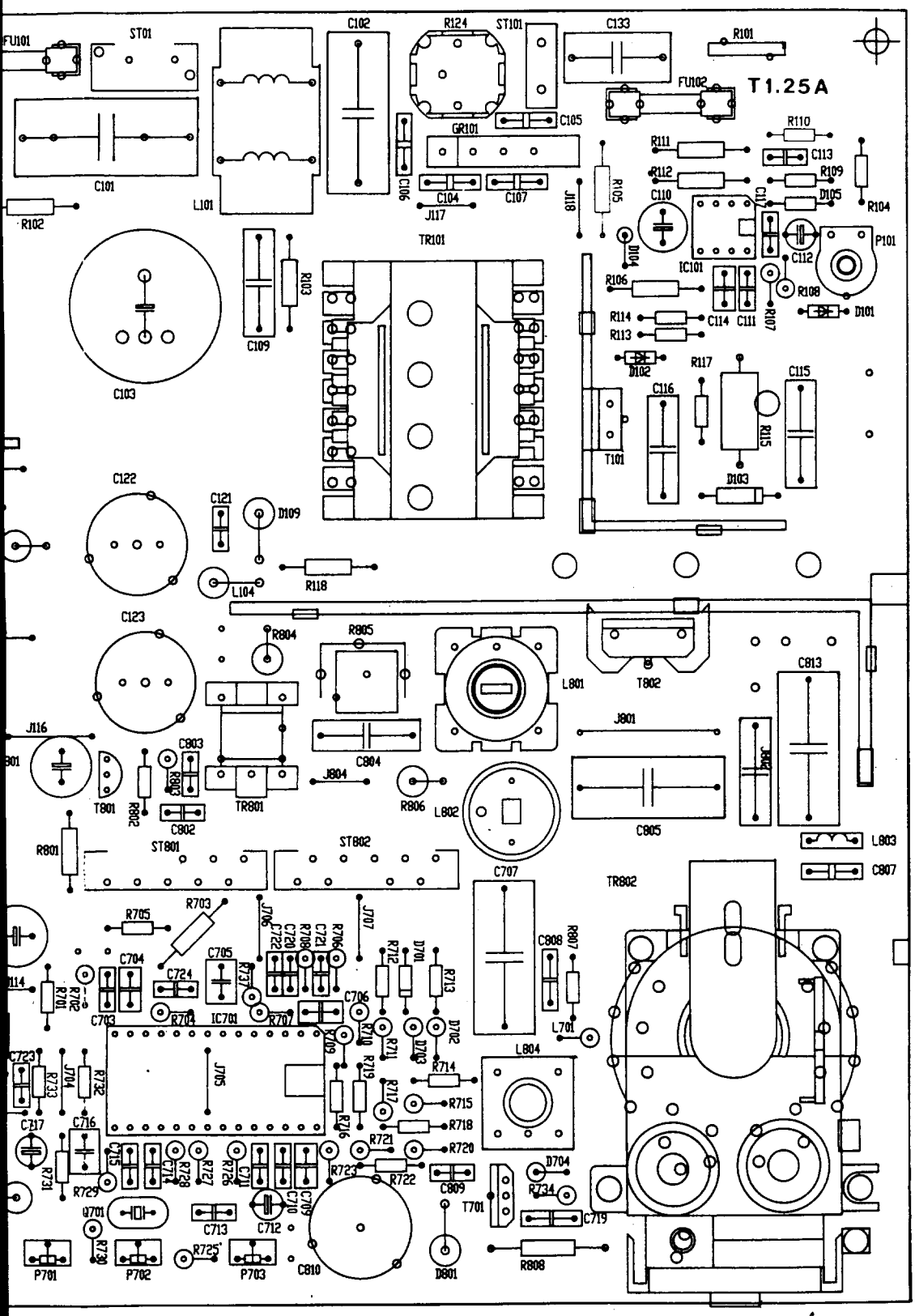
T1.25A
FU101
ST01
C101
L101
C102
R124
ST101
C133
R101
FU102
C105
GR101
C106
C104
C107
J117
J118
R105
R102
TR101
R103
C109
C103
R110
R111
C113
R112
R109
C110
D105
R104
D104
IC101
C112
P101
R106
R108
D101
R114
C114
C111
R107
R113
D102
R117
C115
C116
R115
T101
D103
C122
C121
D109
L104
R118
C123
R804
R805
L801
T802
C813
J116
C803
R803
C804
J804
R806
L802
J801
C805
T801
R802
C802
TR801
R801
ST801
ST802
C707
TR802
L803
C807
R705
R703
J706
C722
C720
R708
C721
R706
J707
R712
D701
R713
C808
R807
C704
C705
R737
C724
C706
R710
D702
R711
D703
L701
R701
R702
C703
R704
IC701
R707
R709
L804
C723
J704
R732
J705
R714
R719
R717
R715
R718
R733
C717
C716
R736
R721
R720
R731
R729
C715
C714
R728
R727
R726
C711
R723
R722
C809
D704
R734
Q701
C713
C712
C710
C709
T701
C719
P701
P702
P703
R730
R725
C810
D801
R808

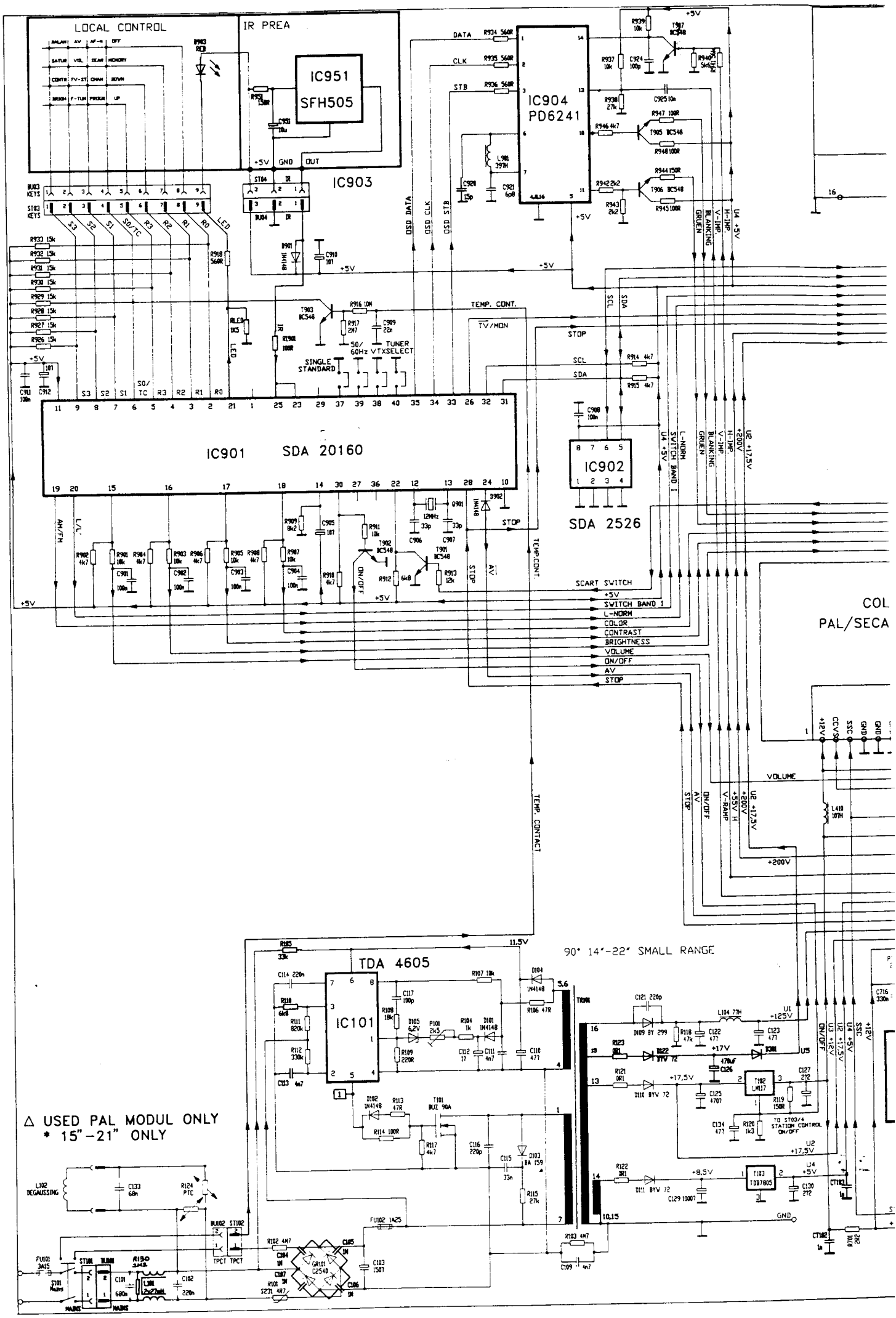
LOCAL CONTROL
IR PREA
IC951
SFH505
IC903
IC904
PD6241
IC901
SDA 20160
IC902
SDA 2526
TDA 4605
IC101
90° 14"-22" SMALL RANGE
△ USED PAL MODUL ONLY
* 15"-21" ONLY
COL
PAL/SECA
DATA
CLK
STB
OSD DATA
OSD CLK
OSD STB
TEMP. CONT.
TV/MON
STOP
SCL
SDA
SINGLE STANDARD
50/60Hz
TUNER VTXSELECT
SCART SWITCH
SWITCH BAND I
L-NORM
COLOR
CONTRAST
BRIGHTNESS
VOLUME
ON/OFF
AV
TEMP. CONTACT
VOLUME
L102 DEGAUSSING
MAINS

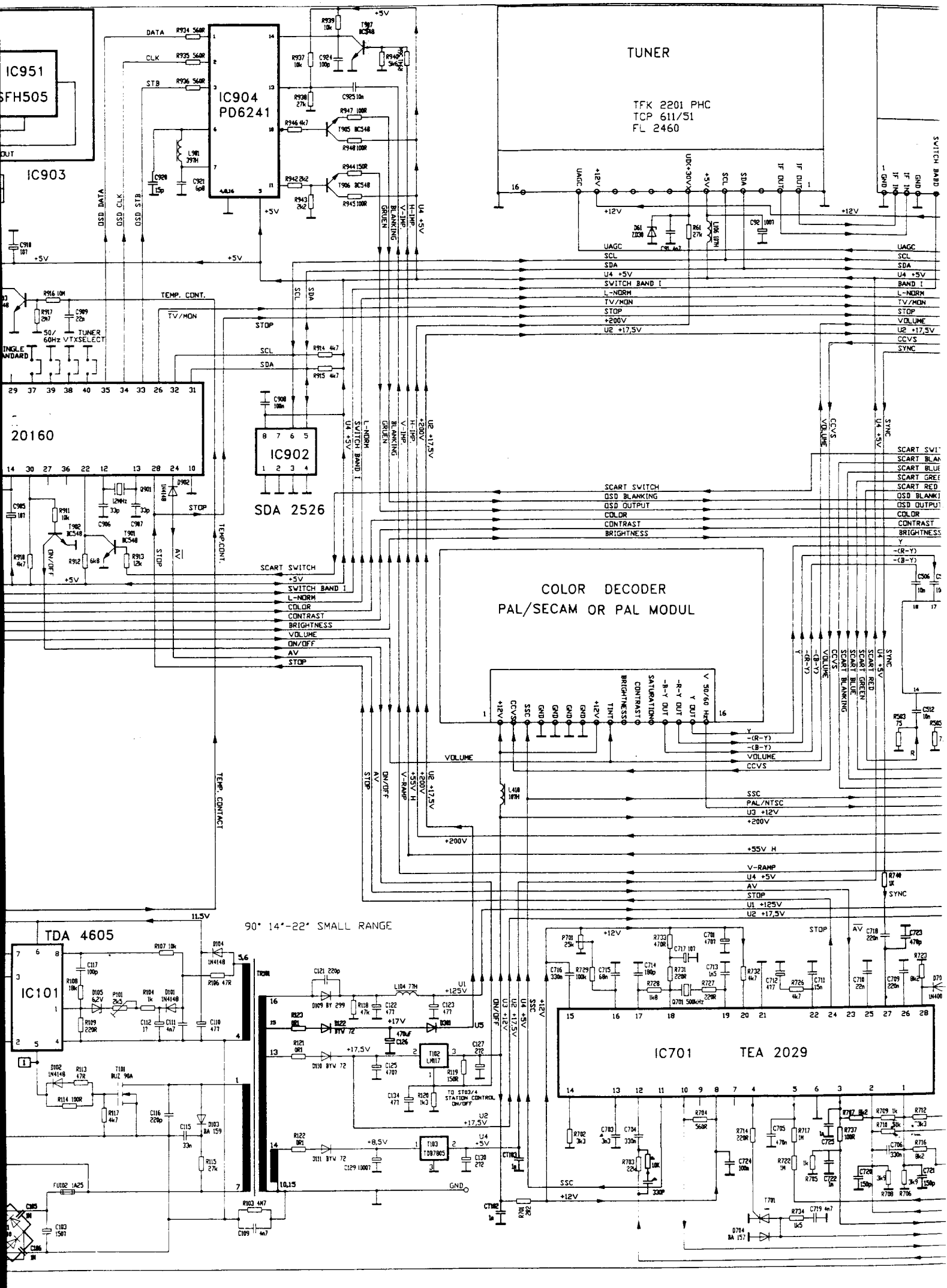
IC904
PD6241
IC903
IC951
SFH505
TUNER
TFK 2201 PHC
TCP 611/51
FL 2460
IC902
SDA 2526
20160
COLOR DECODER
PAL/SECAM OR PAL MODUL
TDA 4605
IC101
90° 14"-22" SMALL RANGE
IC701
TEA 2029
DATA
CLK
STB
OSD DATA
OSD CLK
OSD STB
TEMP. CONT.
TV/MON
STOP
SCL
SDA
SCART SWITCH
OSD BLANKING
OSD OUTPUT
COLOR
CONTRAST
BRIGHTNESS
SWITCH BAND I
L-NORM
VOLUME
ON/OFF
AV
TEMP. CONTACT
SSC
PAL/NTSC
U3 +12V
+200V
+55V H
V-RAMP
U4 +5V
U1 +125V
U2 +17,5V
CCVS
SYNC
BAND I
+12V
+5V
+17V
+17,5V
+8,5V
GND

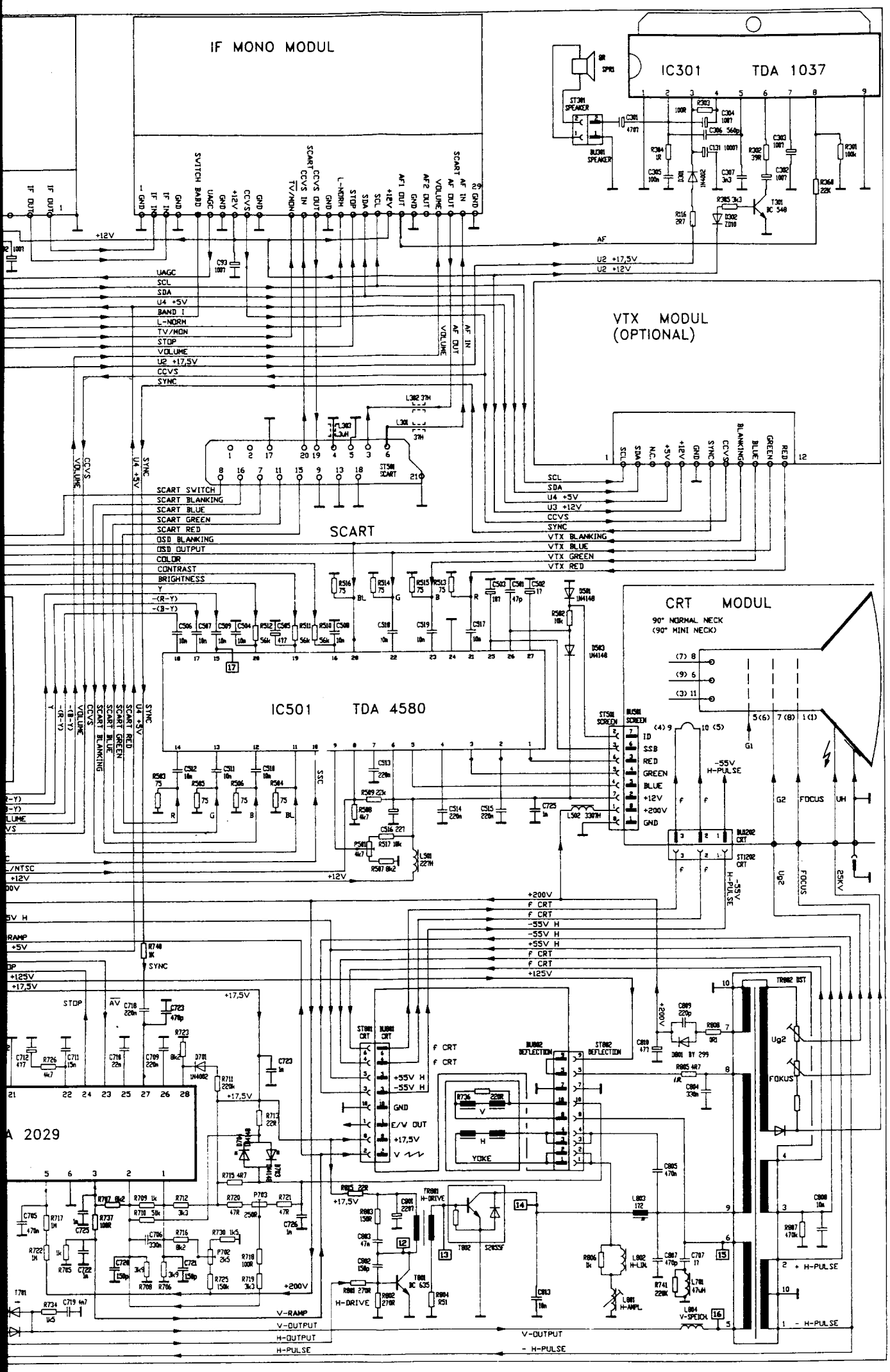
IF MONO MODUL
IC301 TDA 1037
VTX MODUL (OPTIONAL)
SCART
IC501 TDA 4580
CRT MODUL
90° NORMAL NECK
(90° MINI NECK)
A 2029
YOKE
H-DRIVE
V-RAMP
V-OUTPUT
H-OUTPUT
H-PULSE
- H-PULSE
+ H-PULSE
FOKUS
Ug2
25KV

MA

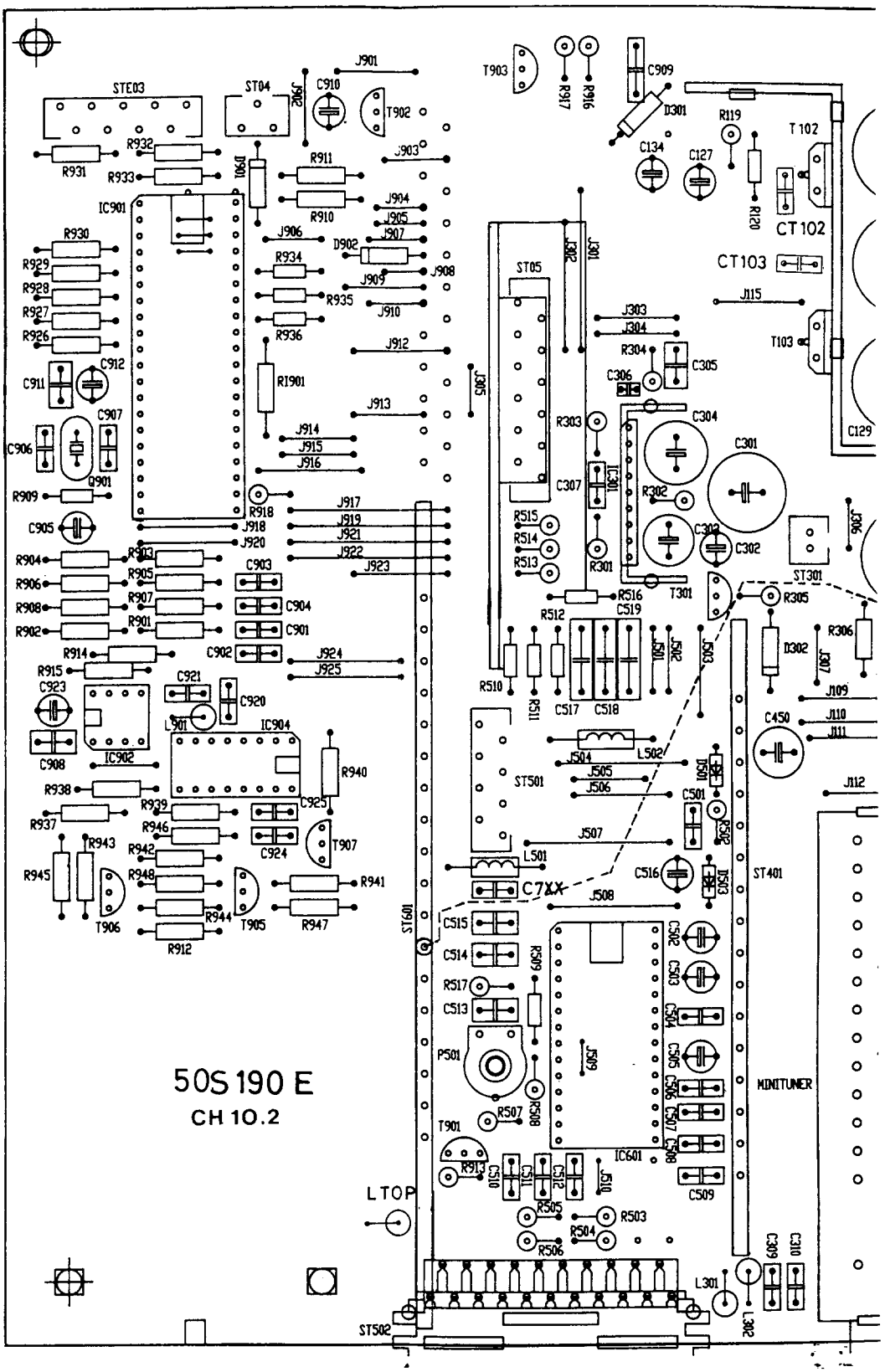
50S190 E
CH 10.2
LTOP
MINITUNER
CT102
CT103
C7XX
STE03
ST04
ST05
ST301
ST401
ST501
ST601
ST502
IC901
IC902
IC904
IC601
Q901
T901
T902
T903
T906
T907
T905
T102
T103
T301
P501
L301
L302
L501
L502
L901
D301
D302
D901
D902
R1901
C129

MAIN CHASSIS 90°

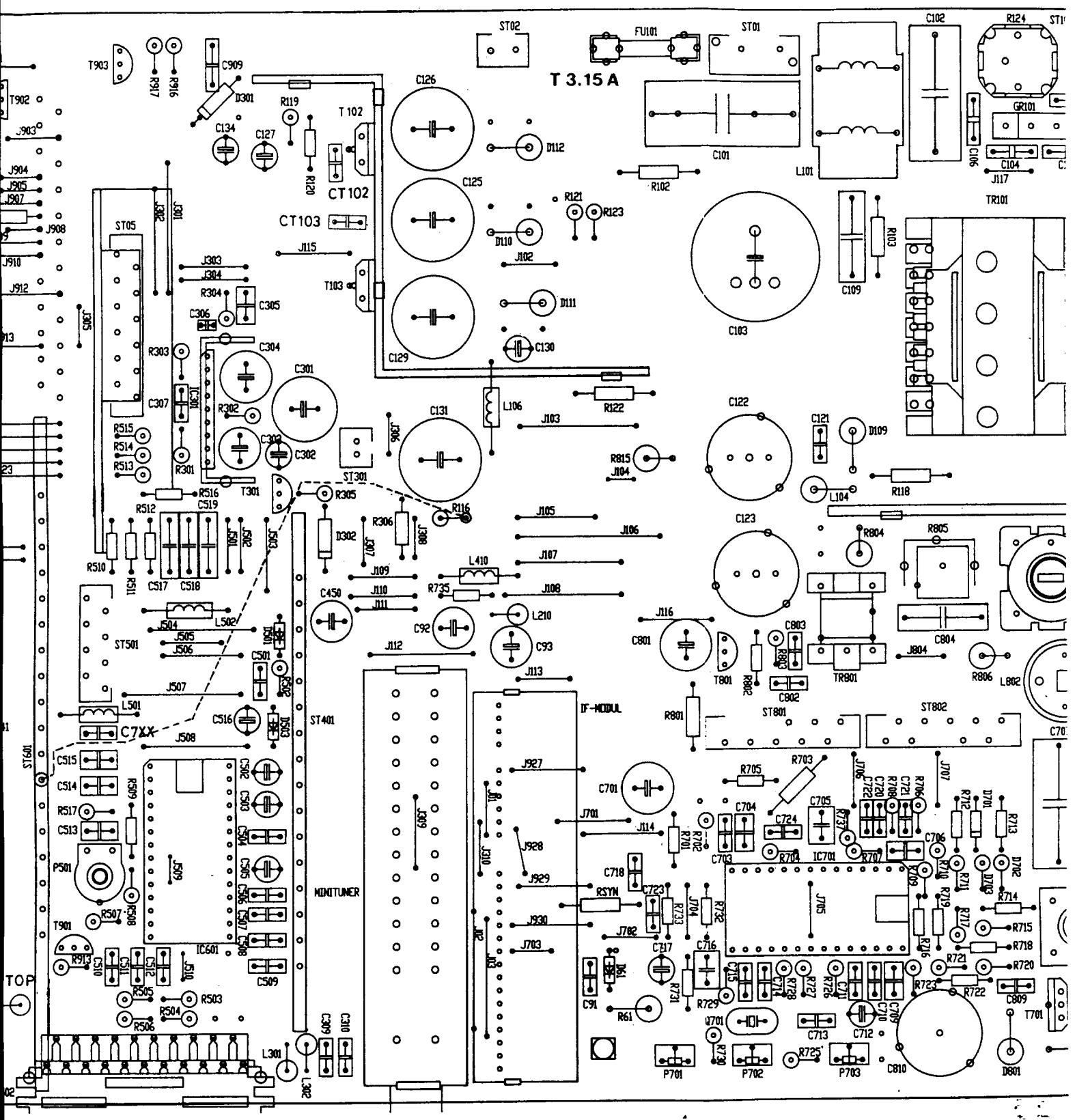

90°

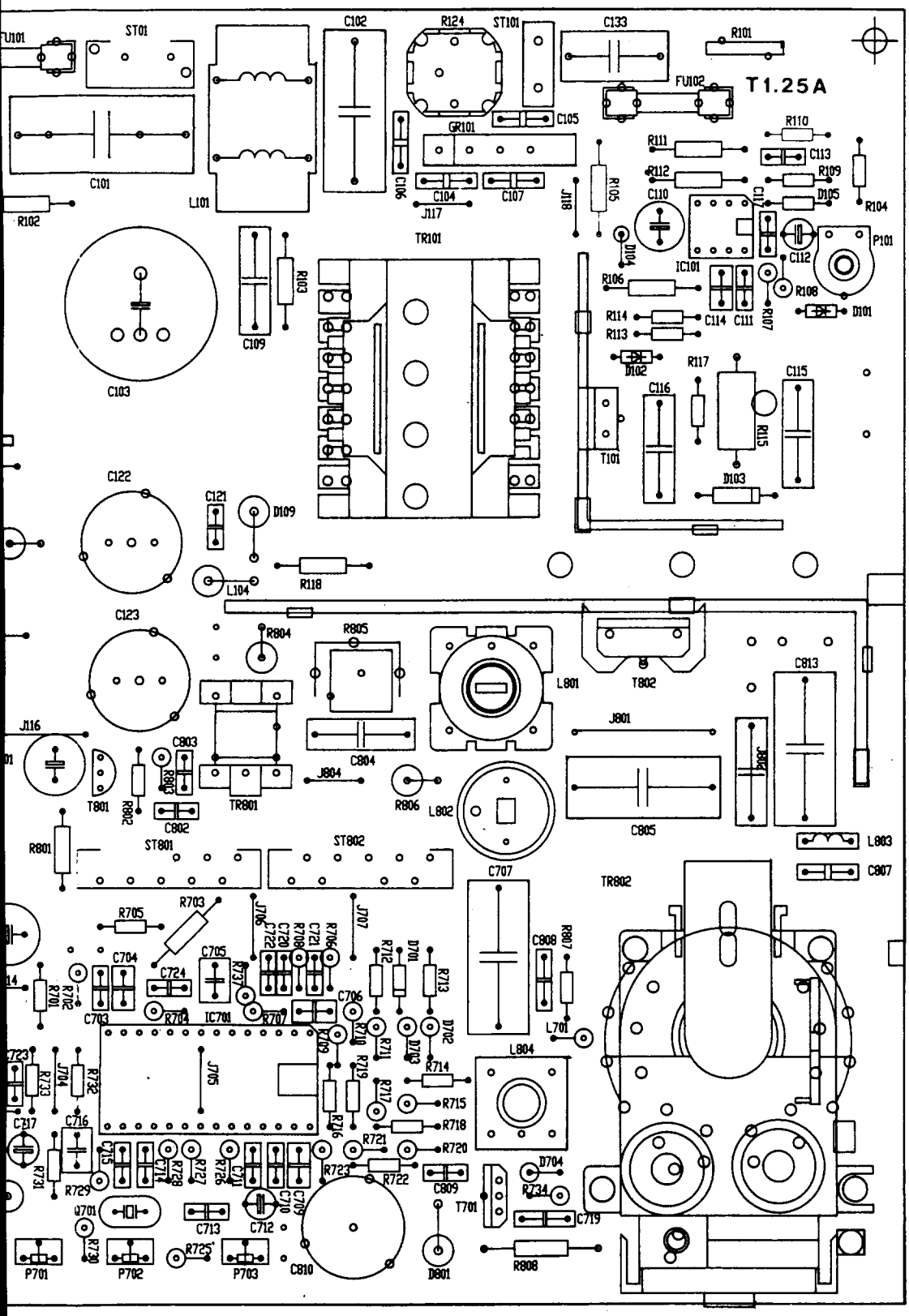
T1.25A
FU101
ST01
C101
R102
L101
C102
R124
ST101
C133
R101
FU102
C105
GR101
C106
C104
C107
J117
J118
R105
R110
R111
C113
R112
R109
C110
C108
D105
R104
TR101
D104
IC101
C112
P101
R103
C109
R106
R108
R107
D101
R114
C114
C111
R113
D102
R117
C115
C103
C116
R115
T101
D103
C122
C121
D109
L104
R118
C123
R804
R805
L801
T802
C813
J116
C803
R803
J801
C804
J804
R806
L802
C805
T801
R802
C802
TR801
R801
ST801
ST802
L803
C807
C707
TR802
R703
R705
J706
C722
C720
R708
C721
R706
J707
R712
D701
R713
C808
R807
C704
C724
C705
R737
R702
R701
C703
R704
IC701
R707
C706
R710
R711
D703
D702
L701
J709
R719
R714
L804
R723
J704
R733
R732
J705
R715
R718
C717
C716
R716
R721
R720
R731
R729
C715
C714
R728
R727
R726
C711
R722
C709
C710
C708
D704
R734
C809
T701
C719
Q701
C713
C712
R739
R725
C810
D801
R808
P701
P702
P703

MAIN CHASSIS 110° STEREO

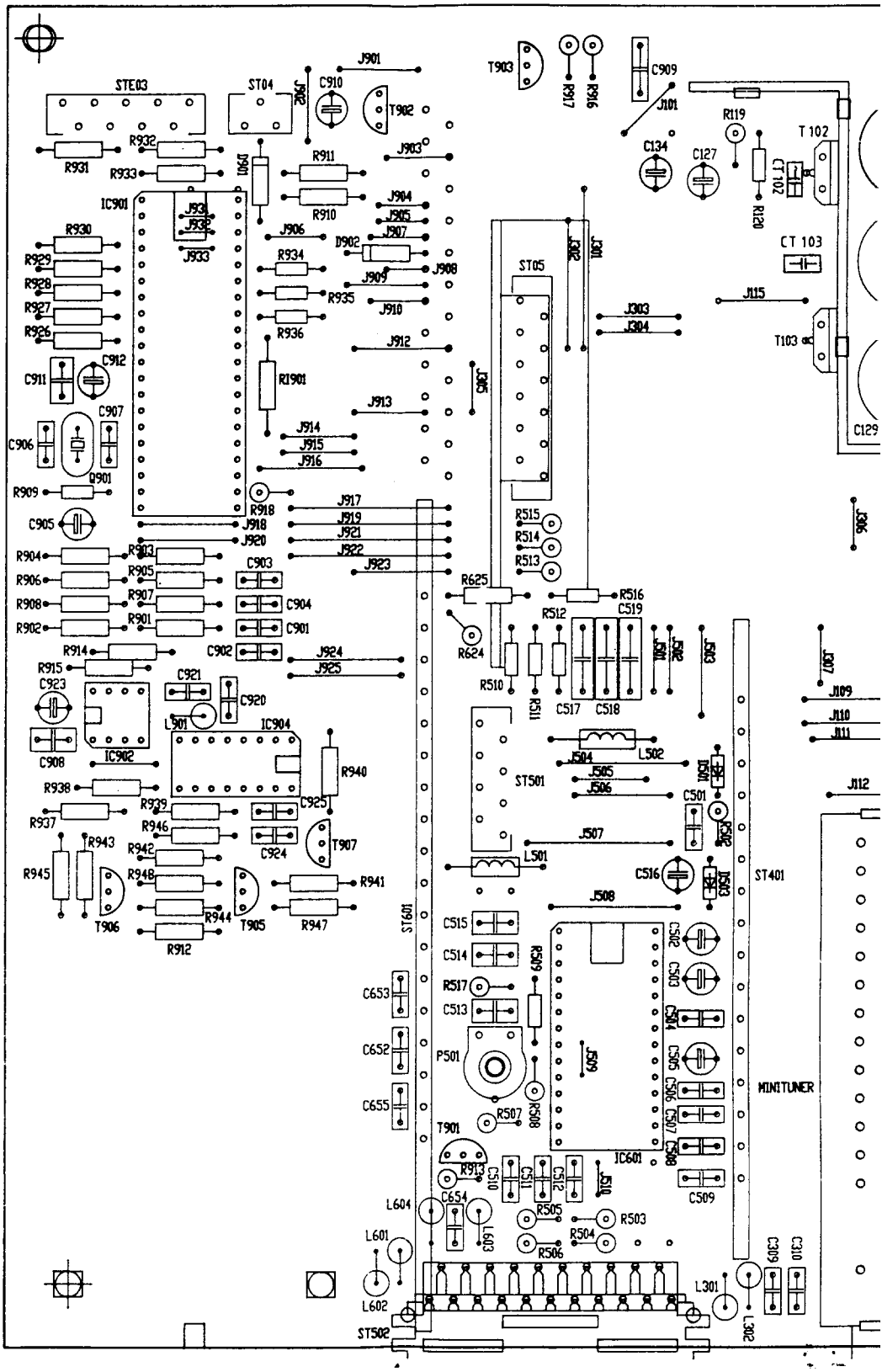

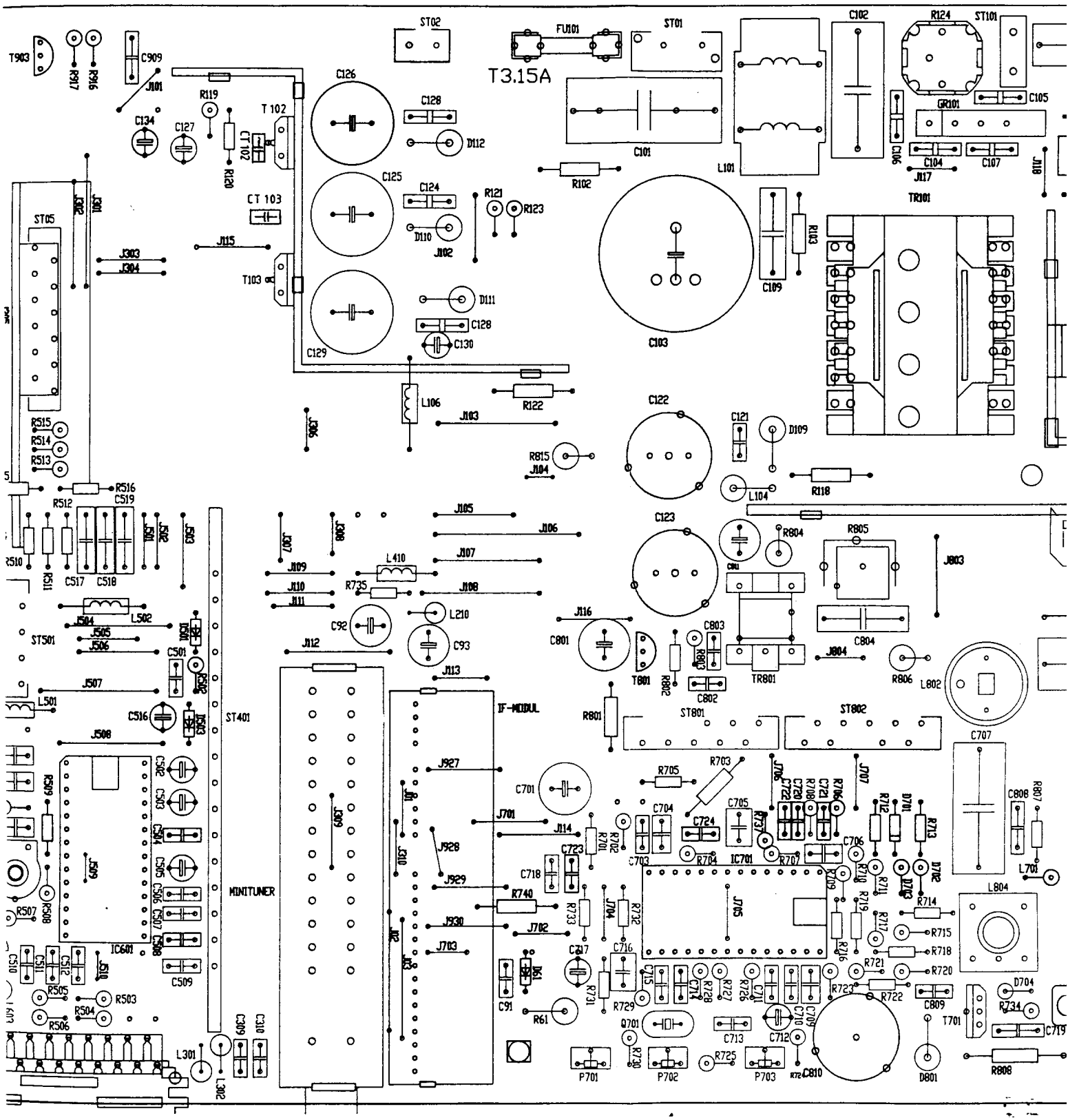
T3.15A
FU101
ST02
ST01
ST101
C102
R124
C105
GR101
C106
C104
C107
J117
J118
TR101
C101
L101
R102
C103
C109
R103
C126
C125
C124
C128
D112
D110
J102
R121
R123
CT 103
T 102
CT 102
R119
R120
C134
C127
T903
R917
R916
C909
J101
J301
J302
ST05
J303
J304
J115
T103
D111
C130
C129
L106
R122
J103
J306
R515
R514
R513
R516
R512
C519
R510
R511
C517
C518
J501
J502
J503
J507
J508
J509
J510
J511
J512
J513
J514
J515
J516
J517
J518
J519
J520
J521
J522
J523
J524
J525
J526
J527
J528
J529
J530
J701
J702
J703
J704
J705
J706
J707
J801
J802
J803
J804
J805
J806
J807
J808
J809
J810
J811
J812
J813
J814
J815
J816
J817
J818
J819
J820
J821
J822
J823
J824
J825
J826
J827
J828
J829
J830
J831
J832
J833
J834
J835
J836
J837
J838
J839
J840

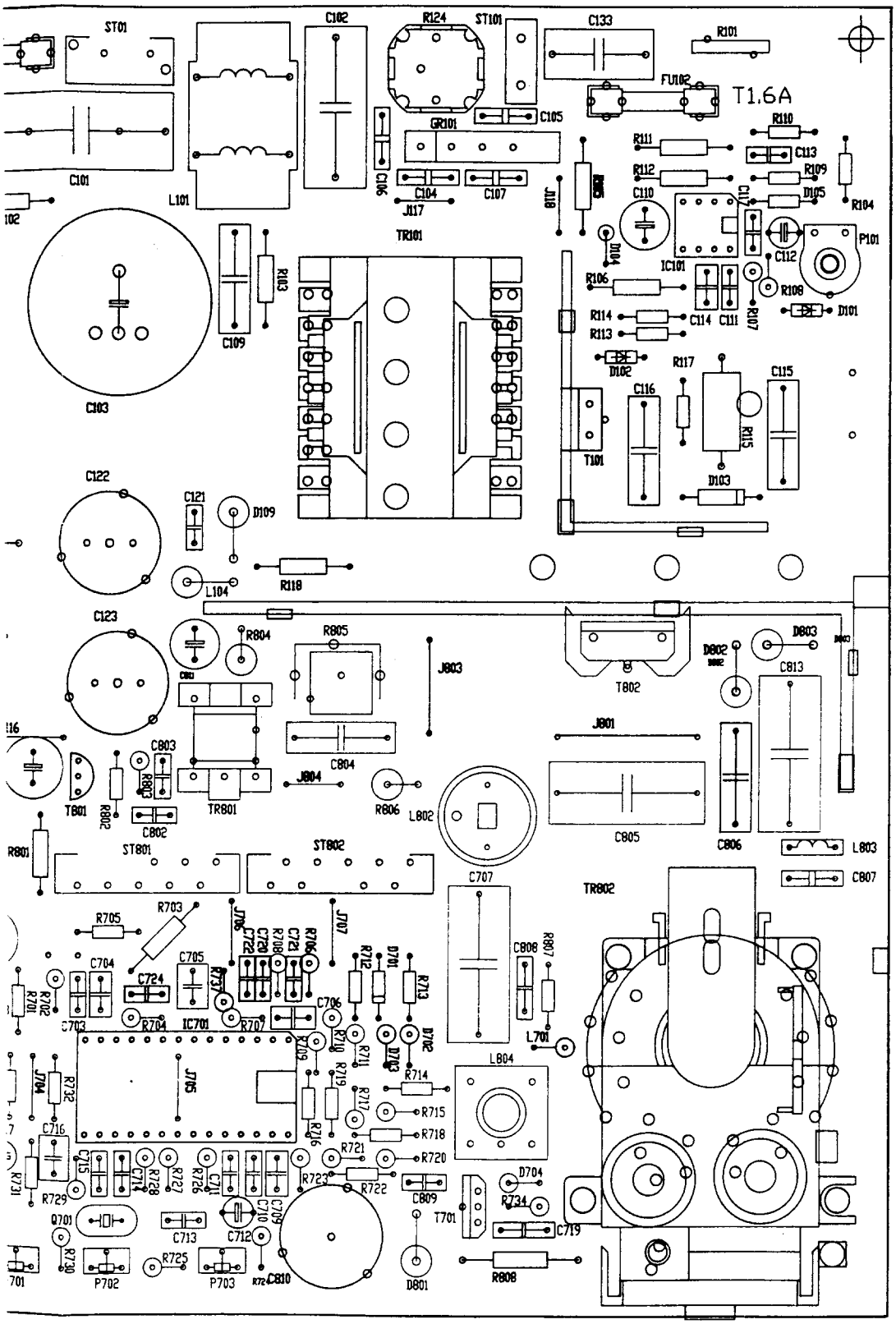
ST01
C102
R124
ST101
C133
R101
FU102
T1.6A
C105
GR101
R110
R111
C113
R112
R109
D105
R104
C101
L101
C106
C104
C107
J117
J118
C110
C117
P101
C112
TR101
D104
IC101
R106
R108
D101
R107
R114
C114
C111
R113
D102
R117
C115
C116
R115
T101
D103
C109
R103
C103
C122
C121
D109
L104
R118
C123
R804
R805
J803
T802
D802
D803
C813
C803
R803
C804
J801
TR801
J804
R806
L802
C805
C806
L803
C807
TB01
R802
C802
R801
ST801
ST802
TR802
R705
R703
J706
C722
R708
C721
R706
J707
R712
D701
R713
C707
C808
R807
C704
C724
C705
R737
R702
R701
C703
R704
IC701
R707
C706
R710
R711
D703
D702
L701
L804
J704
R732
J705
R709
R719
R714
R715
C716
R716
R718
R721
R720
R731
C715
C714
R728
R727
R726
C711
R723
R722
C809
D704
R734
R729
Q701
C713
C712
C710
C708
T701
C719
R730
R725
P702
P703
R724
C810
D801
R808

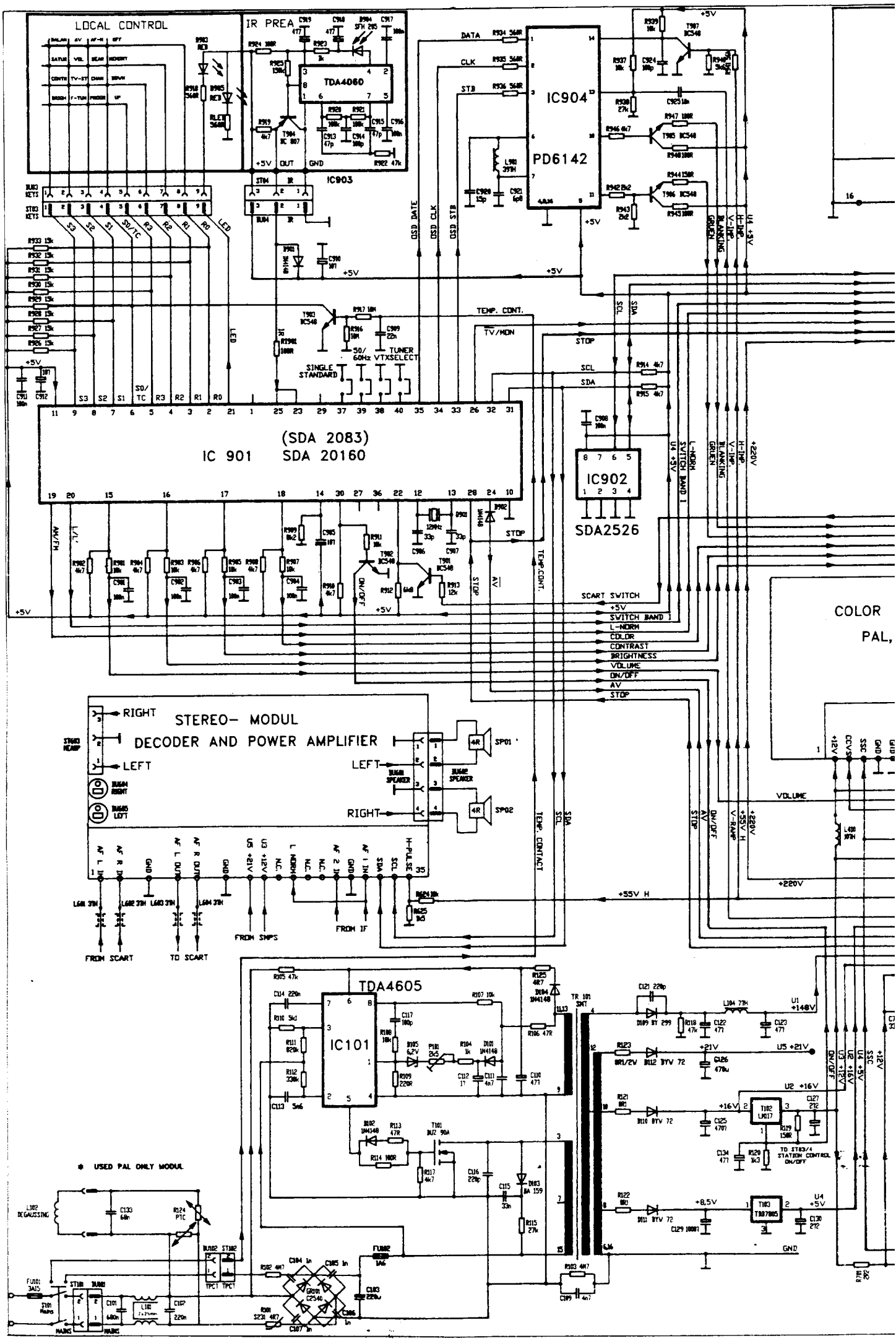
LOCAL CONTROL
IR PREA
TDA4060
IC903
IC904
PD6142
DATA
CLK
STB
OSD DATE
OSD CLK
OSD STB
TEMP. CONT.
TV/MON
STOP
SCL
SDA
SINGLE STANDARD
50/ 60Hz
TUNER VTXSELECT
(SDA 2083)
IC 901 SDA 20160
IC902
SDA2526
SCART SWITCH
+5V
SWITCH BAND 1
L-NORM
COLOR
CONTRAST
BRIGHTNESS
VOLUME
ON/OFF
AV
STOP
COLOR
PAL,
STEREO- MODUL
DECODER AND POWER AMPLIFIER
RIGHT
LEFT
SP01
SP02
FROM SCART
TO SCART
FROM SMPS
FROM IF
+55V H
+220V
TDA4605
IC101
USED PAL ONLY MODUL
DEGAUSSING
MAINS
GND

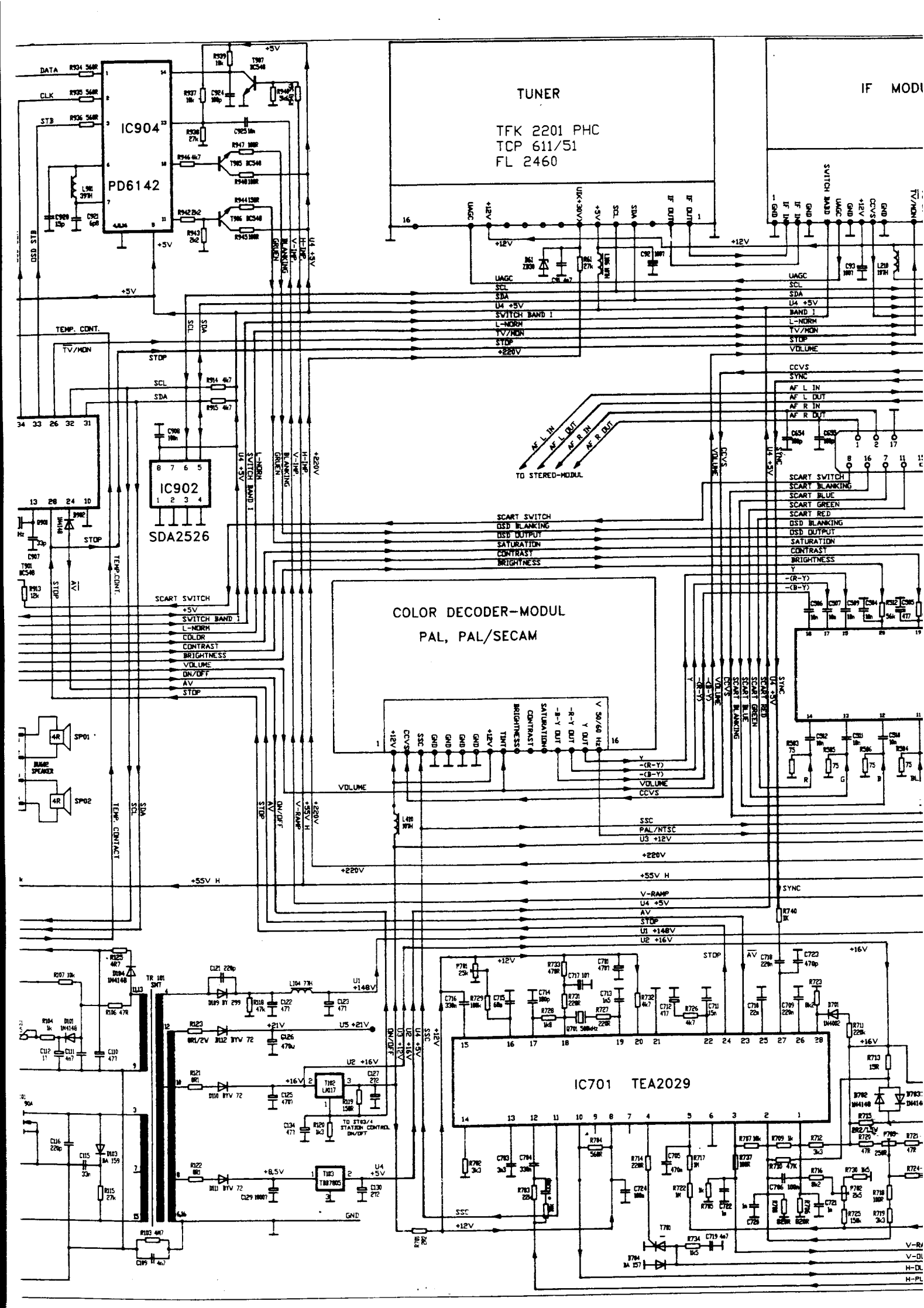
TUNER
TFK 2201 PHC
TCP 611/51
FL 2460
IF MODU
IC904
PD6142
IC902
SDA2526
COLOR DECODER-MODUL
PAL, PAL/SECAM
IC701 TEA2029
TO STEREO-MODUL
SCART SWITCH
SCART BLANKING
SCART BLUE
SCART GREEN
SCART RED
OSD BLANKING
OSD OUTPUT
SATURATION
CONTRAST
BRIGHTNESS
VOLUME
SWITCH BAND I
L-NORM
TV/MON
STOP
+220V
UAGC
SCL
SDA
U4 +5V
CCVS
SYNC
AF L IN
AF L OUT
AF R IN
AF R OUT
TEMP. CONT.
COLOR
ON/OFF
AV
SSC
PAL/NTSC
U3 +12V
+55V H
V-RAMP
U1 +148V
U2 +16V
U5 +21V
+12V
+16V
+5V
GND

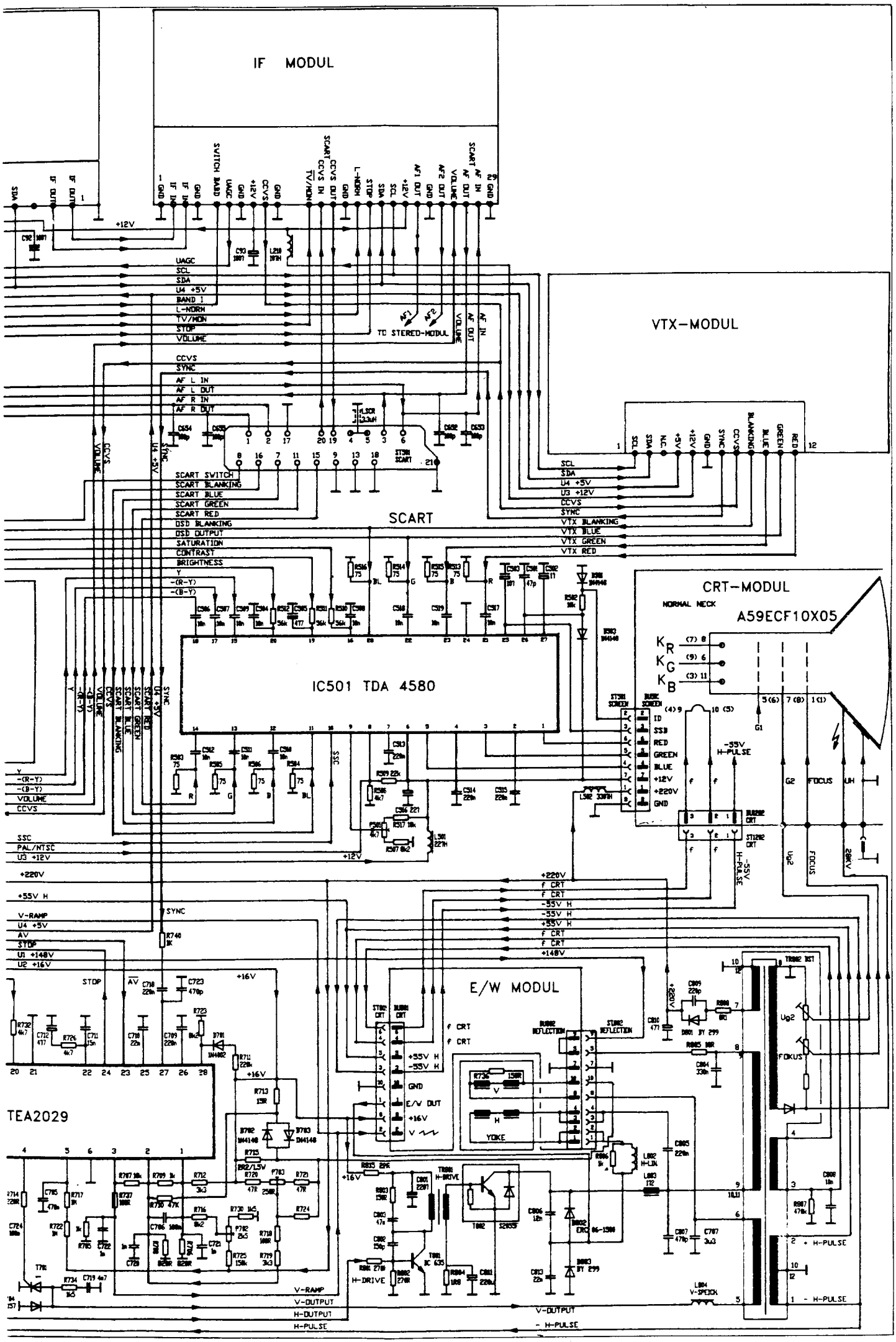
IF MODUL
VTX-MODUL
SCART
IC501 TDA 4580
CRT-MODUL
NORMAL NECK
A59ECF10X05
E/W MODUL
TEA2029
TO STEREO-MODUL
UAGC
SCL
SDA
U4 +5V
BAND I
L-NORM
TV/MON
STOP
VOLUME
CCVS
SYNC
AF L IN
AF L OUT
AF R IN
AF R OUT
SCART SWITCH
SCART BLANKING
SCART BLUE
SCART GREEN
SCART RED
OSD BLANKING
OSD OUTPUT
SATURATION
CONTRAST
BRIGHTNESS
VTX BLANKING
VTX BLUE
VTX GREEN
VTX RED
U3 +12V
PAL/NTSC
SSC
+220V
+55V H
V-RAMP
AV
U1 +148V
U2 +16V
+148V
V-OUTPUT
H-OUTPUT
H-PULSE
- H-PULSE
H-DRIVE
YOKE
FOKUS
FOCUS
G2
G1
-55V H-PULSE